STAMFORD®

LV 804 S WDG 12 - Technical Data Sheet

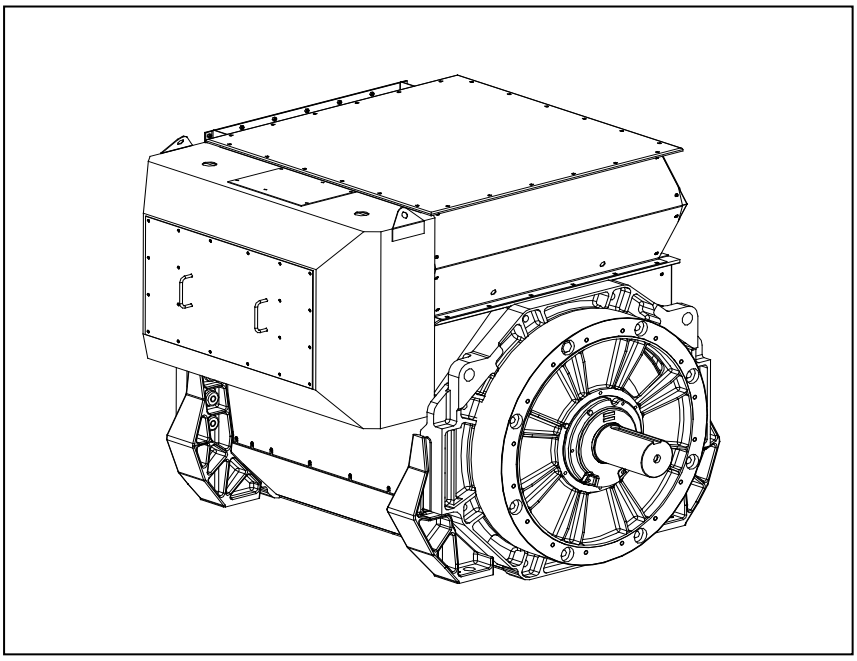

CALL US TODAY
1-888-POWER-58

REQUEST A QUOTE
parts@genpowerusa.com

SHOP ONLINE
www.genpowerusa.com

FRAME LV 804 S

STAMFORD

SPECIFICATIONS & OPTIONS

STANDARDS

Cummins Generator Technologies industrial generators meet the requirements of BS EN 60034 and the relevant sections of other national and international standards such as BS5000, VDE 0530, NEMA MG1-32, IEC60034, CSA C22.2-100, AS1359.
Other standards and certifications can be considered on request.

DESCRIPTION

The STAMFORD PI range of synchronous ac generators are brushless with a rotating field. They are separately excited by the STAMFORD Permanent Magnet Generator (PMG). This is a shaft mounted, high frequency, pilot exciter which provides a constant supply of clean power via the Automatic Voltage Regulator (AVR) to the main exciter. The main exciter output is fed to the main rotor, through a full wave bridge rectifier, protected by surge suppression.

VOLTAGE REGULATORS

The P range generators complete with a PMG are available with an analogue AVR as standard. The AVR has soft start voltage build up and built in protection against sustained over-excitation, which will de-excite the generator after a minimum of 8 seconds.
Underspeed protection (UFRO) is also provided on both AVRs. The UFRO will reduce the generator output voltage proportional to the speed of the generator below a pre-settable level.

The **MA330 AVR** is full wave rectified, 3 phase rms sensed with a voltage regulation of 0.5% rms (see the note on regulation). The UFRO circuit has adjustable slope and dwell for controlled recovery from step loads. An over voltage protection circuit will shutdown the output device of the AVR, it can also trip an optional excitation circuit breaker if required. As an option, short circuit current limiting is available with the addition of current transformers.

The MA330 AVR needs a generator mounted current transformer to provide quadrature droop characteristics for load sharing during parallel operation.
Provision is also made for the connection of the STAMFORD power factor controller, for embedded applications, and a remote voltage trimmer.

WINDINGS & ELECTRICAL PERFORMANCE

All generator stators are wound to 2/3 pitch. This eliminates triplen (3rd, 9th, 15th …) harmonics on the voltage waveform and is found to be the optimum design for trouble-free supply of non-linear loads. The 2/3 pitch design avoids excessive neutral currents sometimes seen with higher winding pitches. A fully connected damper winding reduces oscillations during paralleling. This winding, with the 2/3 pitch and carefully selected pole and tooth designs, ensures very low levels of voltage waveform distortion.

TERMINALS & TERMINAL BOX

Standard generators feature a main stator with 6 ends brought out to the terminals, which are mounted on the frame at the non-drive end of the generator. A sheet steel terminal box contains the AVR and provides ample space for the customers' wiring and gland arrangements. It has removable panels for easy access.

SHAFT & KEYS

All generator rotors are dynamically balanced to better than BS6861:Part 1 Grade 2.5 for minimum vibration in operation. Two bearing generators are balanced with a half key.

INSULATION/IMPREGNATION

The insulation system is class 'H'.
All wound components are impregnated with materials and processes designed specifically to provide the high build required for static windings and the high mechanical strength required for rotating components.

QUALITY ASSURANCE

Generators are manufactured using production procedures having a quality assurance level to
BS EN ISO 9001.

NOTE ON REGULATION

The stated voltage regulation may not be maintained in the presence of certain radio transmitted signals. Any change in performance will fall within the limits of Criteria 'B' of EN 61000-6-2:2001. At no time will the steady-state voltage regulation exceed 2%.

NB Continuous development of our products entitles us to change specification details without notice, therefore they must not be regarded as binding.

Front cover drawing is typical of the product range.

CALL US TODAY
1-888-POWER-58

REQUEST A QUOTE
parts@genpowerusa.com

SHOP ONLINE
www.genpowerusa.com

FRAME LV 804 S

WINDING 12

RATINGS	REFER TO SALES AND SERVICE BRIEFING
MAXIMUM ALTITUDE	1000 METRES ABOVE SEA LEVEL
MAXIMUM AMBIENT TEMPERATURE	40º C

CONTROL SYSTEM SERIES 3	SEPARATELY EXCITED BY P.M.G.	
A.V.R.	FULL WAVE RECTIFIED	
VOLTAGE REGULATION	± 0.5%	WITH 4% ENGINE GOVERNING
SUSTAINED SHORT CIRCUIT	REFER TO SHORT CIRCUIT DECREMENT CURVES OF THIS SECTION	

INSULATION SYSTEM	CLASS H
PROTECTION	IP23 STANDARD
RATED POWER FACTOR	0.8
STATOR WINDING	DOUBLE LAYER LAP
WINDING PITCH	2/3
WINDING LEADS	6
R.F.I. SUPPRESSION	BS EN 50081/2-1/2 VDE 0875G VDE 0875N For other standards apply to the factory
WAVEFORM DISTORTION	NO LOAD < 1.5% NON-DISTORTING BALANCED LINEAR LOAD < 3.0%
MAXIMUM OVERSPEED	2250 Rev/Min
BEARING DRIVE END	ISO 6232 C3
BEARING NON DRIVE END	ISO 6324 C3
EFFICIENCY	REFER TO EFFICIENCY CURVES OF THIS SECTION

FREQUENCY	50Hz				60Hz			
TELEPHONE INTERFERENCE	THF< 2%				TIF<50			
COOLING AIR	3.2 m^3/sec				3.7 m^3/sec			
VOLTAGE STAR (Y)	380	400	415	440	416	440	460	480
kVA BASE RATING FOR REACTANCE VALUES	2650	2790	2790	2620	2900	3070	3210	3350
Xd DIRECT AXIS SYNCHRONOUS	3.10	2.95	2.74	2.29	3.40	3.22	3.08	2.95
X'd DIRECT AXIS TRANSIENT	0.228	0.217	0.202	0.168	0.250	0.237	0.226	0.217
X"d DIRECT AXIS SUB-TRANSIENT	0.167	0.158	0.147	0.123	0.183	0.173	0.165	0.158
Xq QUADRATURE AXIS REACTANCE	2.09	1.99	1.85	1.54	2.29	2.17	2.08	1.99
X"q QUAD. AXIS SUB-TRANSIENT	0.310	0.295	0.274	0.229	0.340	0.322	0.308	0.295
X_L LEAKAGE REACTANCE	0.101	0.096	0.089	0.075	0.111	0.105	0.100	0.096
X_2 NEGATIVE PHASE SEQUENCE	0.240	0.228	0.212	0.177	0.263	0.249	0.238	0.228
X_0 ZERO PHASE SEQUENCE	0.031	0.029	0.027	0.023	0.033	0.032	0.030	0.029
REACTANCES ARE SATURATED	VALUES ARE PER UNIT AT RATING AND VOLTAGE INDICATED TO IEC60034 TOLERENCES							
T'd TRANSIENT TIME CONSTANT	0.187							
T"d SUB-TRANSIENT TIME CONSTANT	0.015							
T'do O.C. FIELD TIME CONSTANT	4.300							
Ta ARMATURE TIME CONSTANT	0.070							
SHORT CIRCUIT RATIO	1/Xd							

STATOR WINDING RESISTANCE (L-N)	0.000543
ROTOR WINDING RESISTANCE	1.400
EXCITER STATOR FIELD RESISTANCE	17.50
EXCITER ROTOR RESISTANCE (L-L)	0.076
PMG STATOR RESISTANCE (L-L)	3.800
RESISTANCE VALUES ARE IN OHMS AT 20º C	

NO LOAD EXCITATION VOLTAGE	15.0
FULL LOAD EXCITAION VOLTAGE	63.0

Continuous development of our products entitles us to change specification details without notice, therefore they must not be regarded as binding.

CALL US TODAY
1-888-POWER-58

REQUEST A QUOTE
parts@genpowerusa.com

SHOP ONLINE
www.genpowerusa.com

THREE PHASE EFFICIENCY CURVES

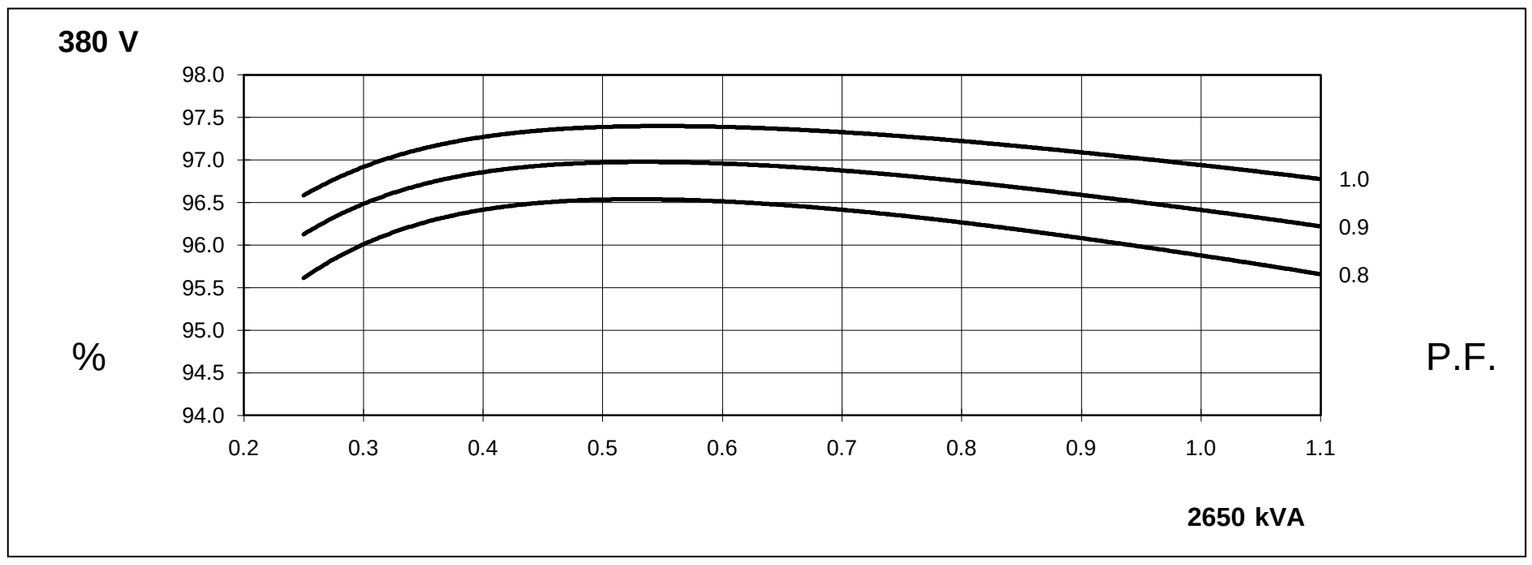

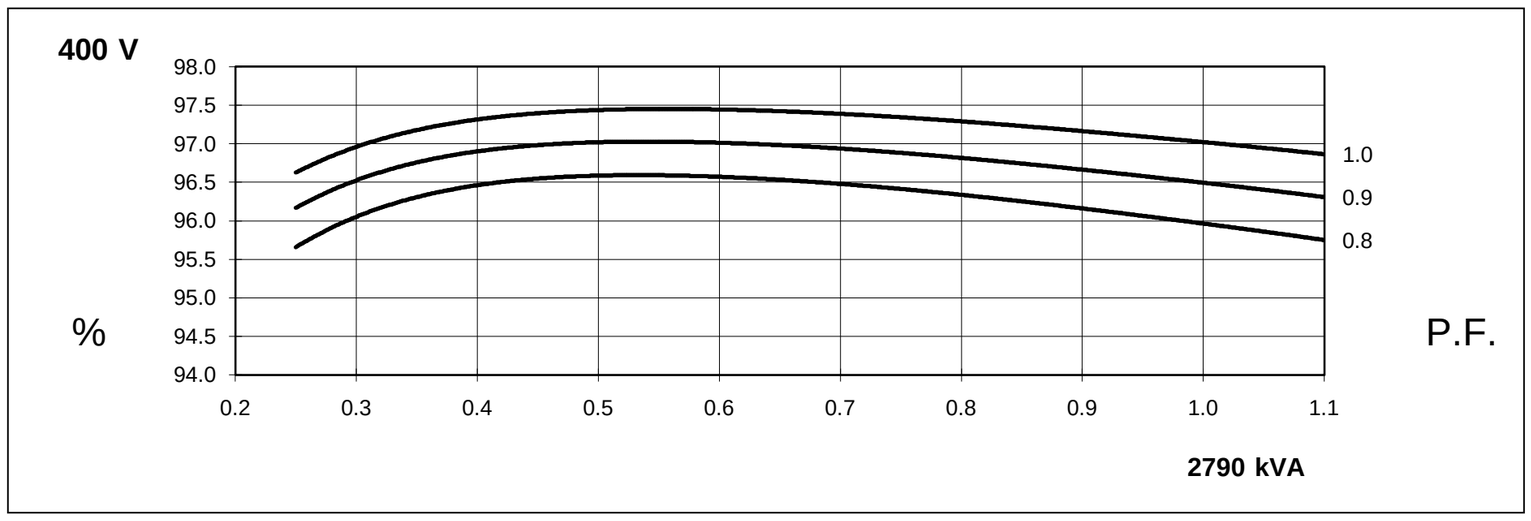

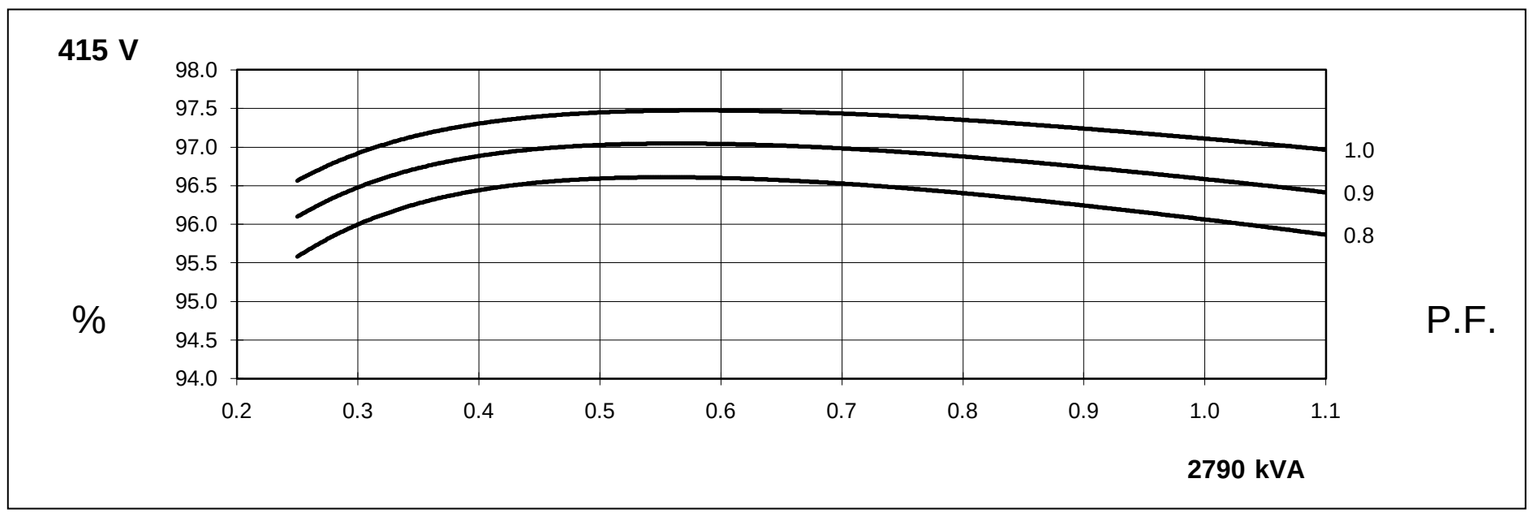

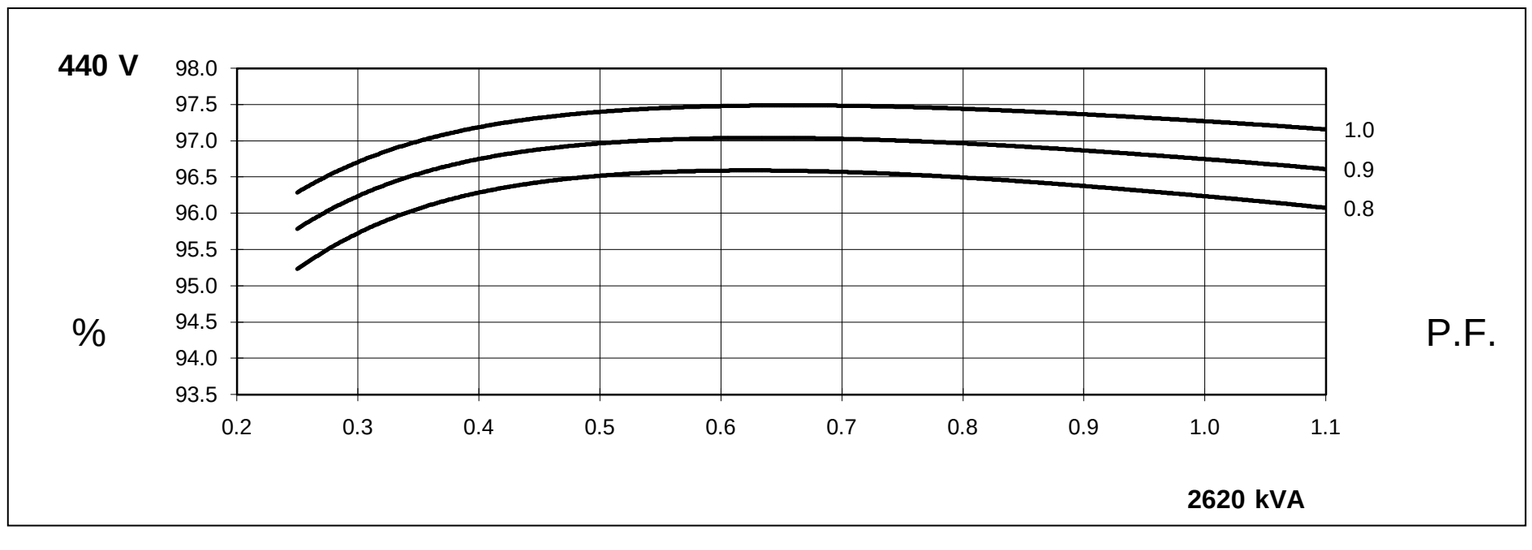

THREE PHASE EFFICIENCY CURVES

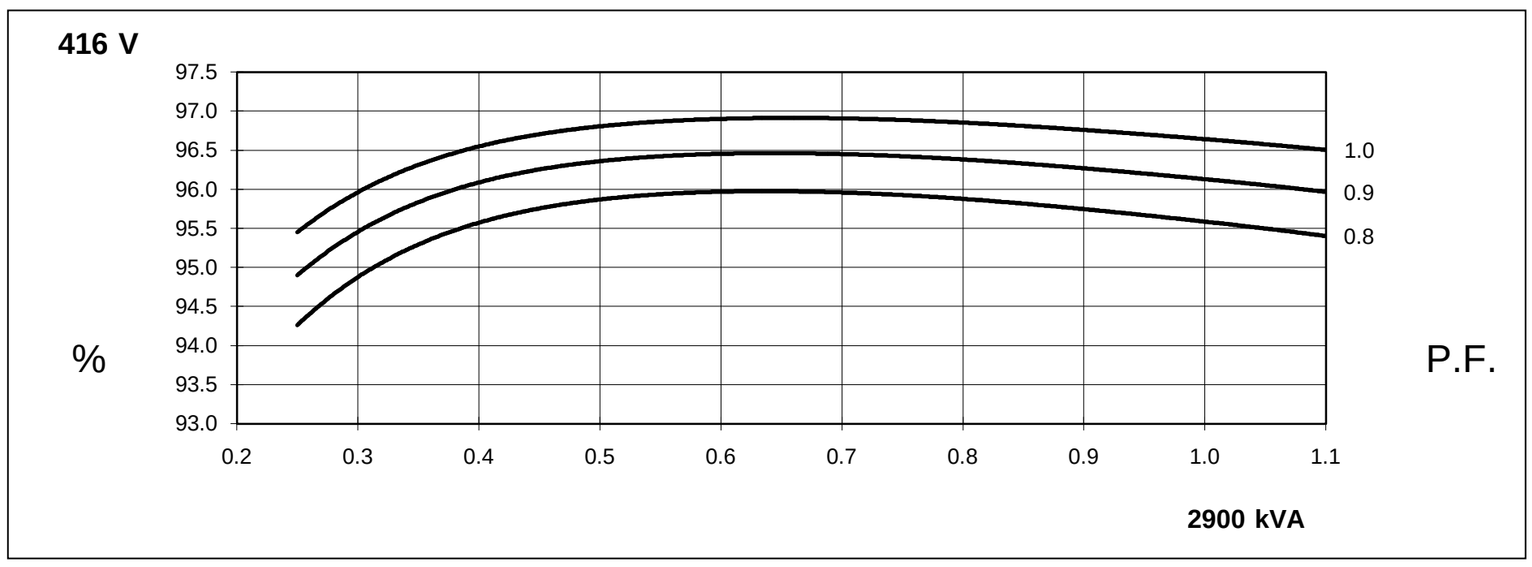

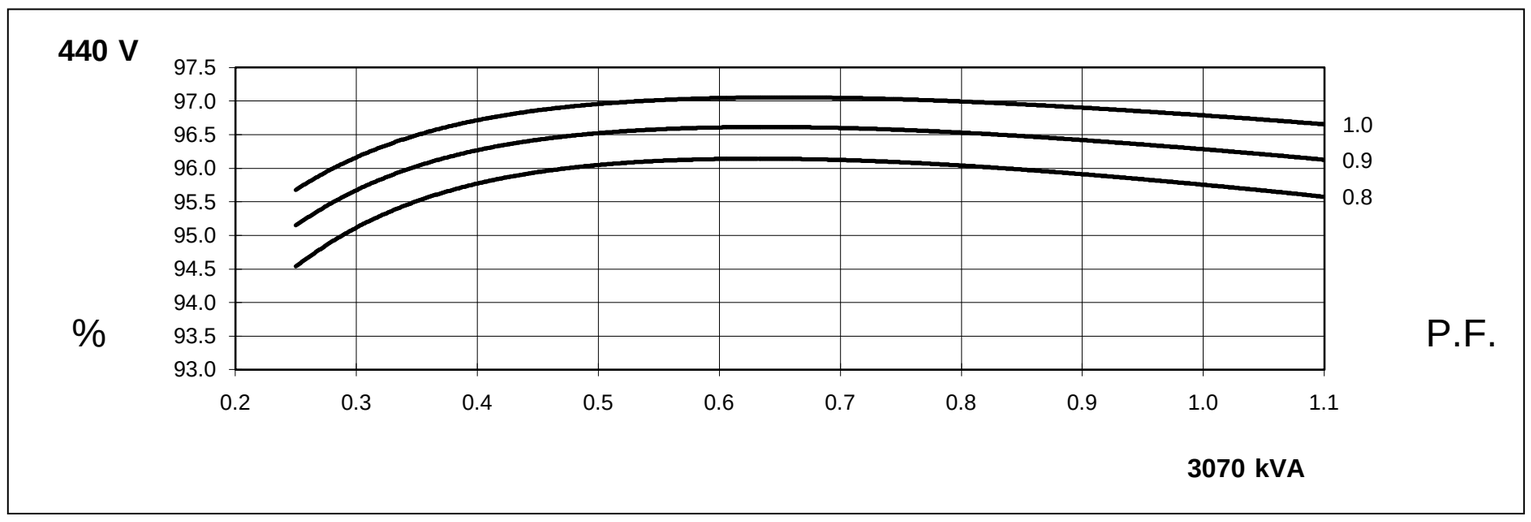

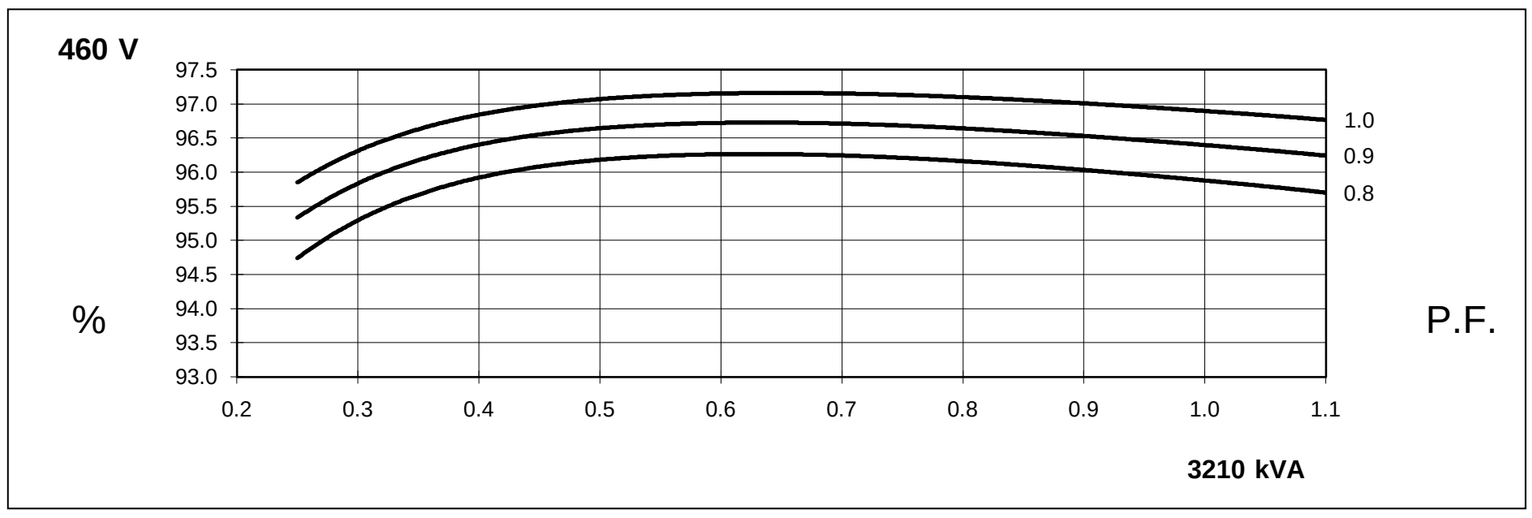

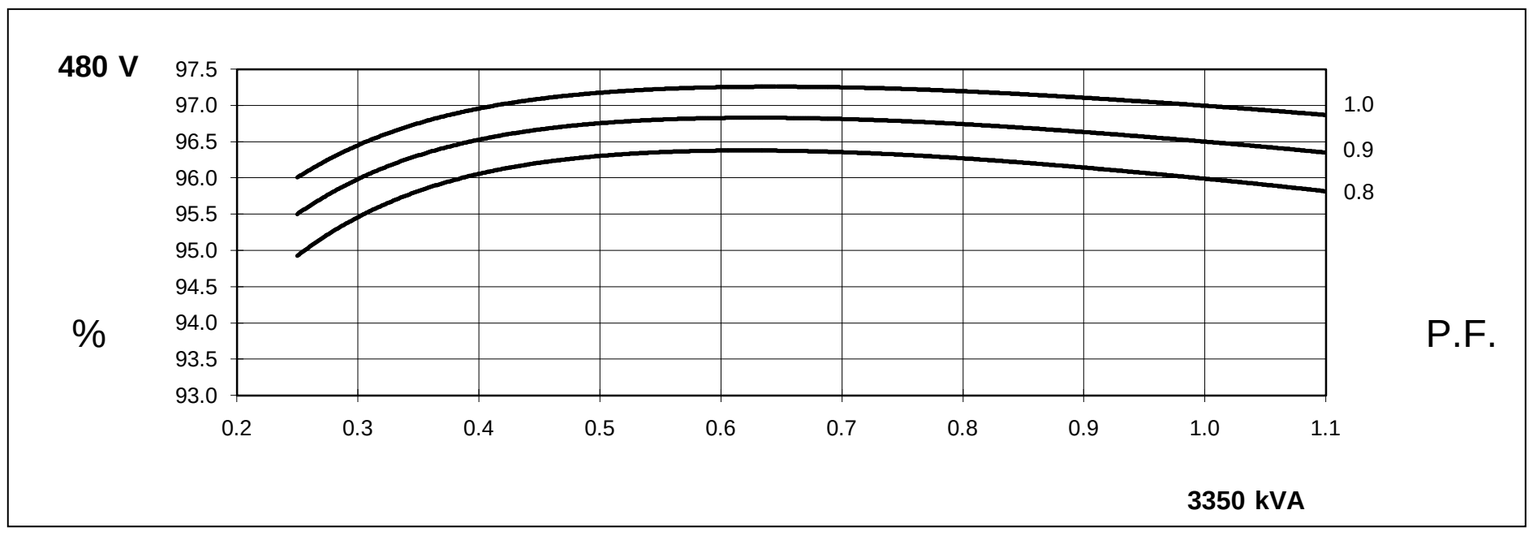

FRAME LV 804 S WDG 12 50Hz

STAMFORD

FULL WAVE RECTIFIED AVR
LOCKED ROTOR MOTOR STARTING CURVE

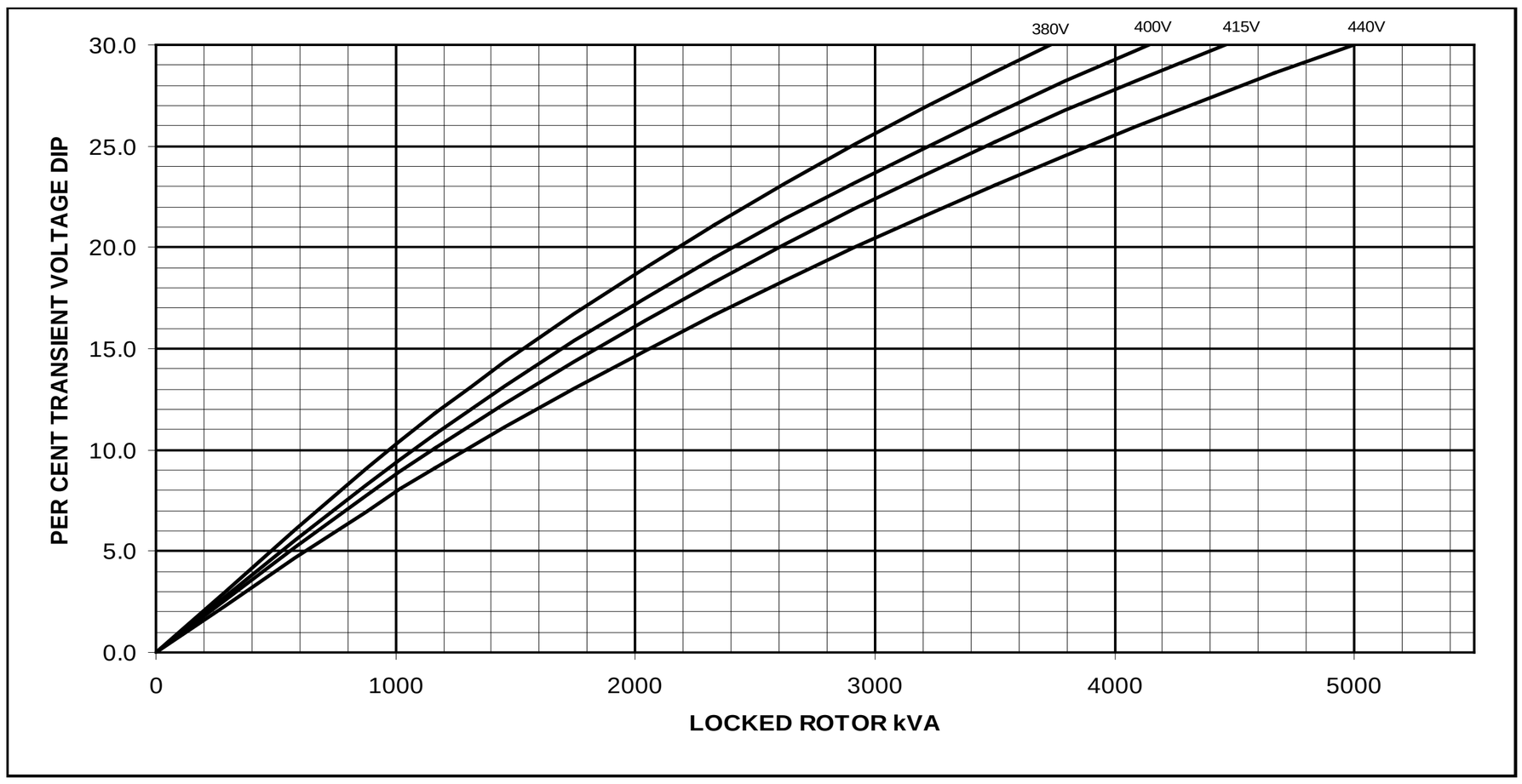

FRAME LV 804 S WDG 12 50Hz

Three Phase Short Circuit Decrement Curve
No- Load Excitation at Rated Speed

Based on series star (wye) connection

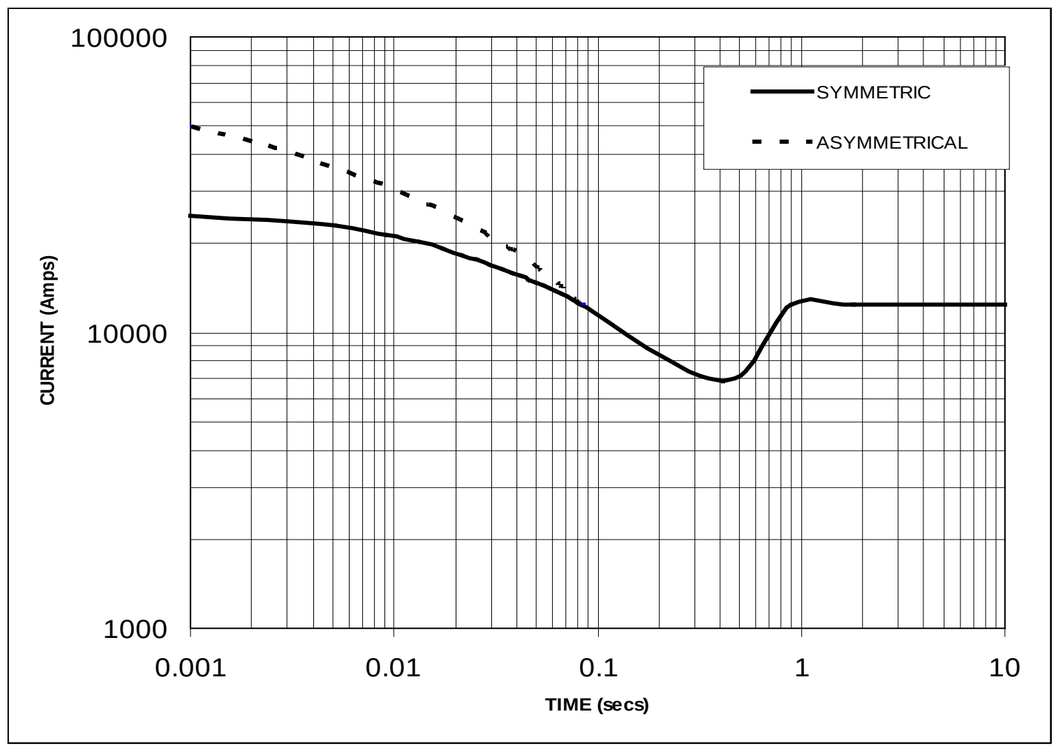

NOTE 1
THE FOLLOWING MULTIPLICATION FACTORS SHOULD BE USED TO ADJUST THE VALUES FROM CURVES BETWEEN THE 0.001 SECONDS AND THE MINIMUM CURRENT POINT IN RESPECT OF NOMINAL OPERATING VOLTAGE

VOLTAGE	FACTOR
380V	X 0.95
400V	X 1.00
415V	X 1.04
440V	X1.10

THE SUSTAINED CURRENT VALUE IS CONSTANT IRRESPECTIVE OF VOLTAGE LEVEL

NOTE 2
THE FOLLOWING MULTIPLICATION FACTORS SHOULD BE USED TO CONVERT THE VALUES CALCULATED IN ACCORDANCE WITH NOTE 1 TO THOSE APPLICABLE TO THE VARIOUS TYPES OF SHORT CIRCUIT

	3 PHASE	2 PHASE L-L	1 PHASE L-N
INSTANTANEOUS	X 1.0	X 0.87	X 1.30
MINIMUM	X 1.0	X 1.80	X 3.20
SUSTAINED	X 1.0	X 1.50	X 2.50
MAX SUSTAINED DURATION	10 SEC	5 SEC	2 SEC

ALL OTHER TIMES ARE UNCHANGED

SUSTAINED SHORT CIRCUIT = 12484 Amps

CALL US TODAY
1-888-POWER-58
REQUEST A QUOTE
parts@genpowerusa.com
SHOP ONLINE
www.genpowerusa.com

FRAME LV 804 S WDG 12 60Hz

STAMFORD

FULL WAVE RECTIFIED AVR
LOCKED ROTOR MOTOR STARTING CURVE

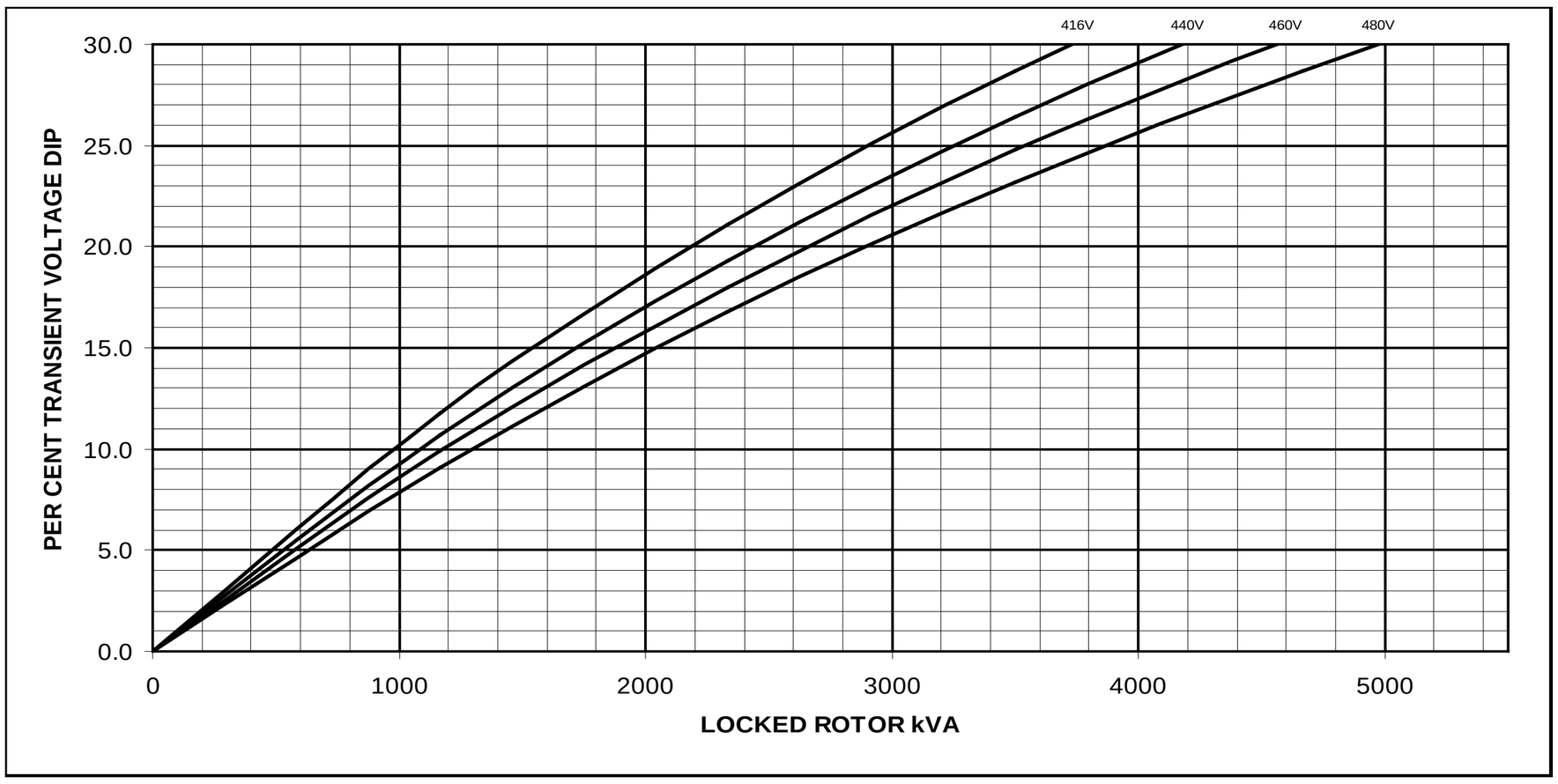

FRAME LV 804 S WDG 12 60Hz

Three Phase Short Circuit Decrement Curve
No- Load Excitation at Rated Speed

Based on series star (wye) connection

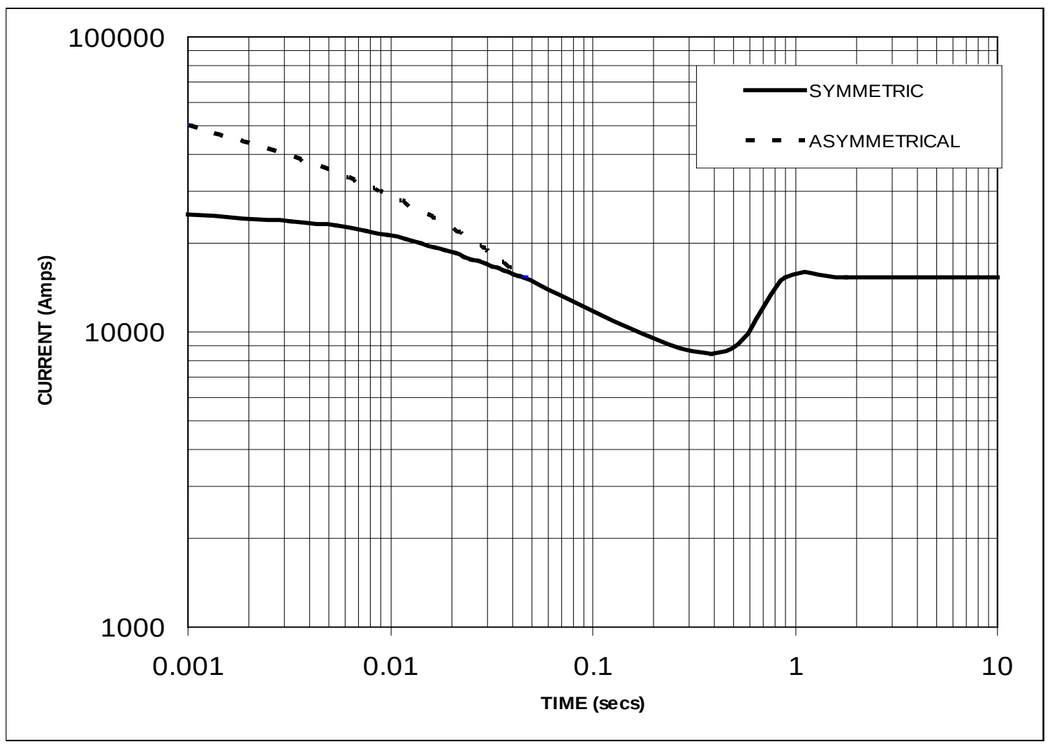

NOTE 1
THE FOLLOWING MULTIPLICATION FACTORS SHOULD BE USED TO ADJUST THE VALUES FROM CURVES BETWEEN THE 0.001 SECONDS AND THE MINIMUM CURRENT POINT IN RESPECT OF NOMINAL OPERATING VOLTAGE

VOLTAGE	FACTOR
416V	X 0.87
440V	X 0.92
460V	X0.96
480V	X1.00

THE SUSTAINED CURRENT VALUE IS CONSTANT IRRESPECTIVE OF VOLTAGE LEVEL

NOTE 2
THE FOLLOWING MULTIPLICATION FACTORS SHOULD BE USED TO CONVERT THE VALUES CALCULATED IN ACCORDANCE WITH NOTE 1 TO THOSE APPLICABLE TO THE VARIOUS TYPES OF SHORT CIRCUIT

	3 PHASE	2 PHASE L-L	1 PHASE L-N
INSTANTANEOUS	X 1.0	X 0.87	X 1.30
MINIMUM	X 1.0	X 1.80	X 3.20
SUSTAINED	X 1.0	X 1.50	X 2.50
MAX SUSTAINED DURATION	10 SEC	5 SEC	2 SEC

ALL OTHER TIMES ARE UNCHANGED

SUSTAINED SHORT CIRCUIT = 15312 Amps

CALL US TODAY
1-888-POWER-58

REQUEST A QUOTE
parts@genpowerusa.com

SHOP ONLINE
www.genpowerusa.com

FRAME LV 804 S

STAMFORD

WINDING 12 0.8 Power Factor

RATINGS

Class - Temp Rise	Cont. F - 105/40°C				Cont. H - 125/40°C				Standby - 150/40°C				Standby - 163/27°C			
50Hz Star (V)	380	400	415	440	380	400	415	440	380	400	415	440	380	400	415	440
kVA	2430	2560	2560	2405	2650	2790	2790	2620	2835	2985	2985	2805	2915	3070	3070	2885
kW	1944	2048	2048	1924	2120	2232	2232	2096	2268	2388	2388	2244	2332	2456	2456	2308
Efficiency (%)	96.0	96.1	96.2	96.3	95.9	96.0	96.1	96.2	95.7	95.8	95.9	96.1	95.7	95.8	95.9	96.1
kW Input	2025	2132	2130	1998	2211	2326	2323	2178	2369	2492	2490	2335	2438	2565	2562	2402

60Hz Star (V)	416	440	460	480	416	440	460	480	416	440	460	480	416	440	460	480
kVA	2665	2820	2947	3075	2900	3070	3210	3350	3105	3285	3435	3585	3195	3380	3531	3685
kW	2132	2256	2358	2460	2320	2456	2568	2680	2484	2628	2748	2868	2556	2704	2825	2948
Efficiency (%)	95.7	95.8	96.0	96.1	95.6	95.8	95.9	96.0	95.4	95.6	95.7	95.9	95.4	95.6	95.7	95.8
kW Input	2228	2354	2457	2560	2427	2565	2678	2792	2602	2748	2870	2992	2679	2829	2952	3077

TYPICAL DIMENSIONS - Further arrangements available - please refer to factory

P80 R/S/T CORES

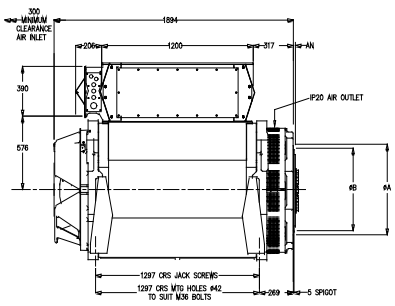

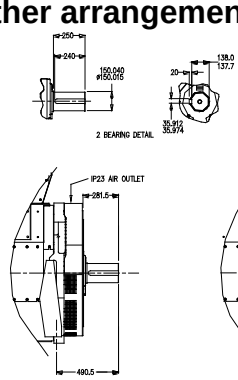

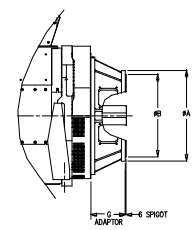

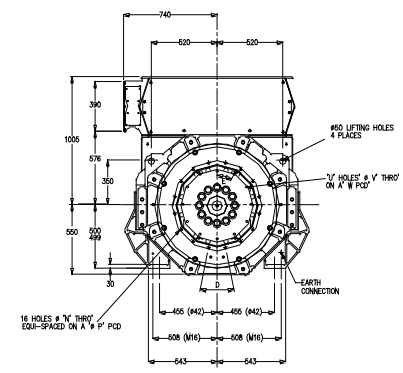

P80 R/S/T CORES 1-BRG ADAPTORS					
SAE	A	B	N	P	D
SAE 0	711	647.7	14	679.5	22.5°
SAE 00	883	787.4	14	851.0	22.5°

P80 R/S/T/W/X CORES 1-BRG COUPLING DISC						
SAE	AN	C	U	V	W	E
18	15.9	571.4	12	16.7	543.0	30°
21	0	673.0	12	16.7	641.3	30°
24	0	733.3	12	20.7	692.0	30°

P80 R/S/T/W/X CORES 2-BRG ADAPTORS		
	SAE	G
P80 R/S/T	0	271.5
P80 R/S/T	00	271.5
P80 W/X	0	271.5
P80 W/X	00	329.0

P80 R/S/T/W/X CORES 2-BRG ADAPTORS					
SAE	A	B	N	P	D
SAE 0	711	647.7	14	679.5	22.5°
SAE 00	883	787.4	14	851.0	22.5°

P80 W/X CORES

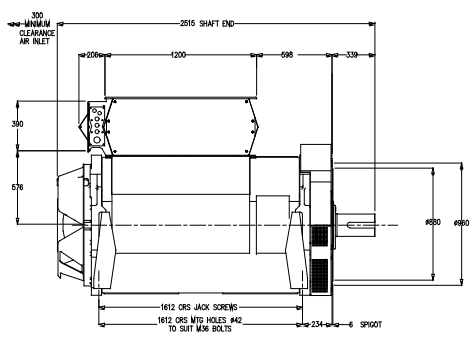

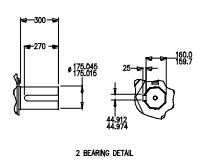

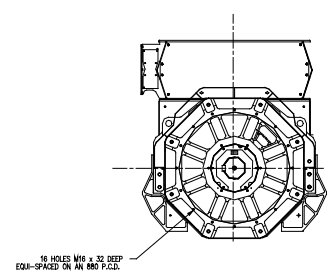

STAMFORD

Barnack Road • Stamford • Lincolnshire • PE9 2NB

Tel: 00 44 (0)1780 484000 • Fax: 00 44 (0)1780 484100

© 2009

CALL US TODAY
1-888-POWER-58

REQUEST A QUOTE
parts@genpowerusa.com

SHOP ONLINE
www.genpowerusa.com